Technical Drawing

BGG969/CGG487/BGG499
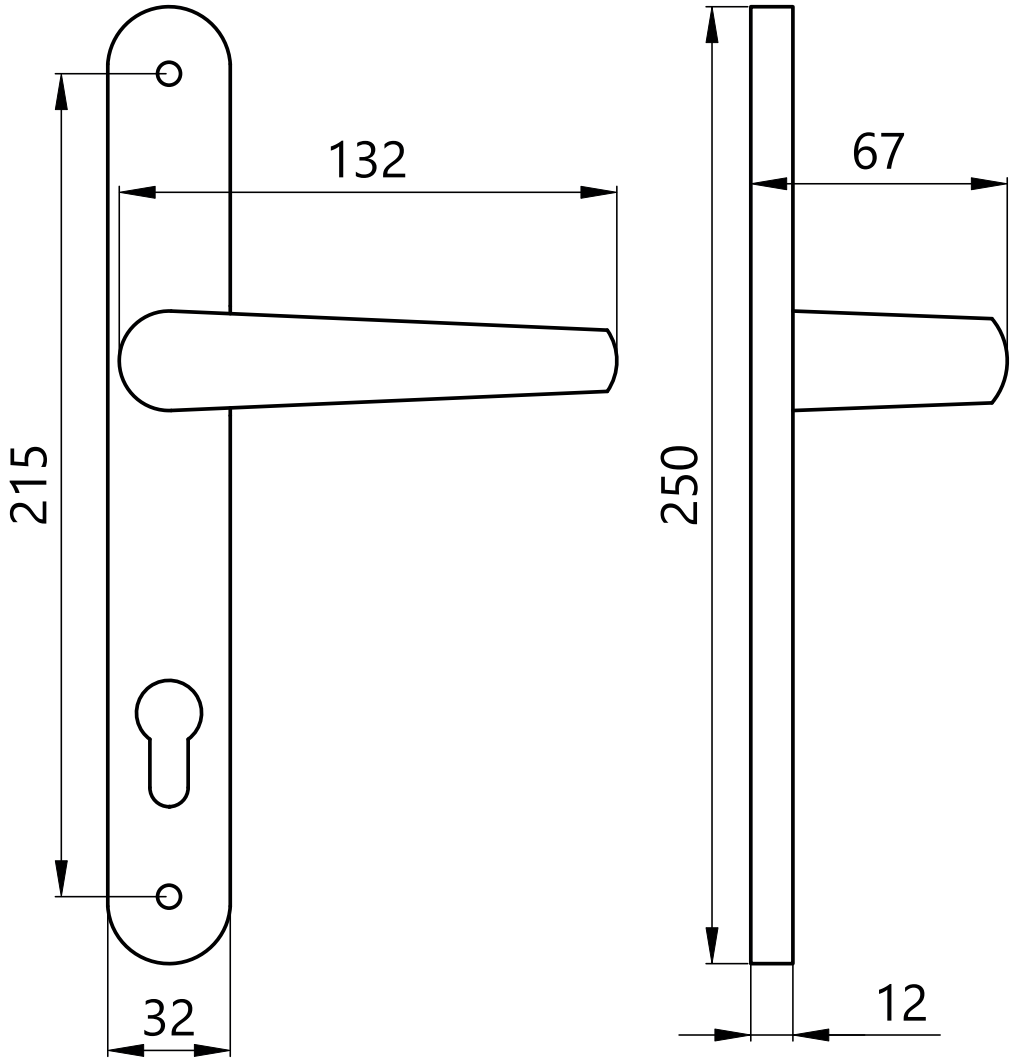
Sheringham Multipoint Lever
92mm centres | Bolt through fixing | Sprung